ATSP CODE:
OPERATIONAL RISK ASSESSMENT AND MITIGATION FOR UAS OPERATIONS IN CONTROLLED AIRSPACE

This document defines the additional risk mitigation measures for UAS operations to be conducted in controlled airspace under the responsibility of ENAIRE, agreed in writing between the UAS operator and the Air Traffic Services Provider (ATSP), and establishes the coordination procedure to be followed in order to carry out the air activity. Furthermore, once validated by ENAIRE, this document constitutes evidence of operational coordination at the strategic phase, in compliance with Article 42.2.b of Royal Decree 517/2024.

The air activity of the UAS operator must be limited to the ConOps referred to in this document, for a specific category in accordance with the requirements established in Chapter II to Annex I of the Resolution of November 10, 2024, of the Directorate of the State Aviation Safety Agency, with code GR-D-031, which approves national standard scenarios (STS-ES-NE) for UAS operations in the "Specific" category in non-EASA activities or services in accordance with Royal Decree 517/2024, of June 4, which develops the legal regime for the civil use of unmanned aircraft systems (UAS). Any operation that does not comply with the conditions established will require a new operational risk assessment and mitigation, as well as new coordination with the ATSP, without prejudice to any penalties that may arise from non-compliance with the agreed measures.

1. UAS OPERATOR AND AIR TRAFFIC SERVICES PROVIDER DETAILS

Contact details for the purposes of strategic coordination and assessment of this document between the two parties:

1.1. UAS operator details

UAS OPERATOR REGISTRATION NUMBER	
NAME OF UAS OPERATOR	
CONTACT PERSON	
TELEPHONE	
EMAIL	

1.2. Air traffic services provider details

NAME OR COMPANY NAME	ENAIRE
CONTACT	ENAIRE Planea / drones.safety@enaire.es / web

2. DEFINITION OF THE CONCEPT OF OPERATION (CONOPS) AND SCOPE

2.1. ConOps

Operations under the specific category must comply with the following conditions:

Category	Operational restrictions	UAS with MTOM
Specific **STS-ES-02NE**	- In controlled ground areas in a sparsely populated environment, without overflying any assemblies of people. - The operation may be conducted in BVLOS up to a maximum horizontal distance of 2000 m, provided that airspace observers are positioned no more than 1000 m from the remote pilot. In the absence of observers, the maximum horizontal distance between the UA and the pilot shall be 1000 m. - Maximum height of 100 m above ground level. The maximum height of the operational volume shall not exceed the aforementioned maximum permitted height by more than 20 m.	**< 25 kg**

This document applies to those air operations with unmanned aircraft that comply with the following parameters:

SPECIFIC CATEGORY **STS-ES-02NE**
BVLOS
WITHIN CONTROLLED AIRSPACE
WITHIN and OUTSIDE THE GENERAL UAS GEOGRAPHICAL ZONES FOR OPERATIONAL SAFETY REASONS IN THE VICINITY OF AERODROMES[1]
DAYTIME AND NIGHT-TIME
MAXIMUM HEIGHT 100 m AGL, except for obstacles[2]
With **UAS**: ☒ with **MTOM < 25 kg** ☒ non-autonomous not ☒ carrying dangerous ☒ not tethered (non-captive) ☒ not operated from moving vehicles ☐ without FPV system ☐ with FPV system (with UA observers)

[1] Zonas geográficas de UAS generales por razón de la seguridad operacional en el entorno de los aeródromos o helipuertos, civiles o militares, a efectos de evaluación del riesgo y coordinación de operaciones de UAS en espacio aéreo controlado. Estas distancias, basadas en las superficies limitadoras de obstáculos alrededor de los aeródromos, se detallan en el anexo a este documento y son independientes al requisito de coordinación de operaciones con el gestor de la infraestructura requerido en el artículo 42.2.b del Real Decreto 517/2024. En consecuencia, esta coordinación no tendrá validez fuera de dichas zonas, en condición VLOS y por debajo de 60 m de altura.

[2] Si una aeronave no tripulada vuela a menos de 50 m, medidos horizontalmente, de un obstáculo artificial de una altura superior a 105 m, la altura máxima de la operación de UAS podrá incrementarse en hasta 15 m por encima de la altura del obstáculo a petición de la entidad responsable del obstáculo.

2.2. Scope of application

This coordination is valid in the controlled airspace and aerodrome flight information zone managed by the ATS units of the following aerodromes:

Units where ENAIRE provides air traffic services

3. DESCRIPTION OF UAS AND SEMANTIC MODEL

This section lists the UAS models the operator will use, along with a description of the semantic model setting out the maximum flight geography and the minimum contingency volume and air risk margin to be maintained.

3.1. Description of UAS

The following tables show the maximum characterisation values of the UAS models that will be used in the operations of the ConOps described above:

Configuration type*	Fixed wing	Helicopter	Autogyro	VTOL (including multirotors)	Aerostat/ other
	☐	☐	☐	☐	☐

Maximum take-off mass (MTOM)*	< 25 kg
	☒

Maximum characteristic dimension*	< 3 m
	☒

Maximum speed*	≤ 33 m/s
	☒

*The UAS technical data are provided by the various manufacturers in the aircraft's documentation.

Each UAS used under this ConOps must comply with the requirements defined in Appendix A to Chapter III of the Resolution of November 10, 2024, of the Directorate of the State Aviation Safety Agency, with code GR-D-031, which approves national standard scenarios (STS-ES-NE), set out in Annex III to this EARO.

3.2. Semantic model

The following describes the semantic model based on the UAS type indicated in the previous section. The data shown are maximum values for the operational volume that the operator must comply with on each of its flights. If airspace observers are used, they must adequately cover the area of operation, and maintain

effective communication with the remote pilot. The distance between the pilot and any observer may not exceed 1000 m. If airspace observers are not used, the UA may not travel more than 1 km from the remote pilot, and must follow a preprogrammed trajectory when not in VLOS. In addition, visibility conditions at the place and time of the operation must be greater than 5 km.

Maximum **flight geography** distances (distances in metres)		Maximum **contingency volume** distances (distances in metres)	
Horizontal*	Vertical	Horizontal***	Vertical***
2000**	**100**	**≥ 15**	**≤ 20**

* Represents the radius of the volume — that is, the distance between pilot and UAS.

** With observer (s). If observers are not available, the horizontal distance of the flight geography shall be reduced to 1000 m.

*** These distances are additional to the volume established for the flight geography.

4. STRATEGIC AND TACTICAL MITIGATIONS FOR AIR RISKS FOR UAS OPERATIONS IN GENERAL UAS GEOGRAPHICAL ZONES FOR OPERATIONAL SAFETY REASONS IN CONTROLLED AIRSPACE UNDER THE RESPONSIBILITY OF ENAIRE

UAS operations carried out in controlled airspace under the responsibility of ENAIRE must comply with the zoning requirements established in Chapter V of Royal Decree 517/2024 and, in addition, the measures that ENAIRE determines for this ConOps to guarantee the safety and continuy of air operations.

Only the applicable measures are marked, bearing in mind that these measures may be subject to the criteria established in the feasibility study of the pre-tactical phase by each of the ENAIRE ATS units or the affected aerodrome/heliport manager for the planned operation:

APPLICABLE	CODE	TYPE OF MITIGATION	MITIGATION MEASURE	REMARKS
☒	MAE01	Strategic	Have adequate communications equipment capable of two-way communications with aeronautical stations and at the frequencies indicated to meet the requirements applicable to the airspace in which it operates.	Art. 43.6.a RD UAS 517/2024 At the discretion of the ATS provider and/or the aerodrome or heliport manager As determined in pre-tactical coordination

☒	MAE02	Strategic	Hold a theoretical training certificate as a radiotelephony operator issued by the State Aviation Safety Agency, and a practical training certificate as a radiotelephony operator issued by an examiner authorised by the State Aviation Safety Agency; or Have the necessary knowledge to obtain the radiotelephony operator rating, evidenced by a rating endorsed on a pilot licence or by a certificate issued by an approved training organisation (ATO) or ultralight school in accordance with Article 33(1)(e) of Royal Decree 1036/2017 (*Valid until 25/06/2026)	Art. 34.1.a RD UAS 517/2024 First transitional provision UAS RD 517/2024 (*Valid until 25/06/2026) Where aeronautical-band radio and/or alternative means of communication have been required by the ATS provider or the aerodrome or heliport manager.
☒	MAE03	Strategic	Demonstrate adequate knowledge of the language or languages used in aeronautical communications, which shall be considered demonstrated where the remote pilots hold a valid language proficiency certificate attesting to at least operational level (level 4) in accordance with Order FOM/1146/2019 of November 13, supplementing the rules applicable to aeronautical personnel as regards language proficiency.	Art. 34.1.b RD UAS 517/2024 Where aeronautical-band radio and/or alternative means of communication have been required by the ATS provider or the aerodrome or heliport manager.
☒	MAE04	Strategic	Prior coordination of the language to be used in aeronautical communications between the operator and the air traffic service.	This shall be considered in particular in the case of foreign operators coming to operate in Spain (English or Spanish).

☒	MAE05	Strategic	Have an alternative communication system with the ATS unit (mobile telephony).	At the discretion of the ATS provider and/or the aerodrome or heliport manager As determined in pre-tactical coordination.
☒	MAE06	Strategic	Have the coordination or express affirmative response of the ATS provider and the manager (s) of the affected aerodromes or heliports. The operation shall be conducted subject to the conditions and limitations established in that coordination.	Art. 42.2.b RD UAS 517/2024 The justification shall be the document "Operational risk assessment and mitigation (EARO) for UAS operations in general UAS geographical zones for operational safety reasons in controlled airspace and flight information zone (FIZ)" or similar.
☒	MAE07	Strategic	**Submit a flight plan for air traffic services (FPL)**. The flight plan shall expressly state that it is an unmanned aircraft system (UAS).	Art. 42.3 RD UAS 517/2024 At the discretion of the ATS provider. As determined in pre-tactical coordination.
☒	MAE09	Strategic	**Coordination with the aerodrome manager**, including heliports, where operations are intended within general UAS geographical zones for operational safety reasons in the vicinity of aerodromes and heliports, civil or military, as established in Article 41 of UAS RD 517/2024.	Art. 41.3 RD UAS 517/2024

☒	MAE10	Strategic	Have procedures in place for consulting and analysing in the AIP the various departure and arrival procedures for the airport in question, taking into account its possible operational configurations (runway in use), including missed approaches and engine-out take-offs. Operations must be carried out by personnel with the appropriate competence to comply with the mitigation requirements relating to the consultation and interpretation of FLIGHT PROCEDURES.	At the discretion of the ATS providers The remote pilot training defined by EASA does not include familiarisation with the AIP and the interpretation of aeronautical charts, so the correct implementation of this measure must be evidenced as an annex to the Operational Risk Assessment and Mitigation.
☒	MAE11	Strategic	Operational restriction on exposure time (use the shortest possible time).	
☒	MAE12	Strategic	Prior coordination, in the operational risk assessment and mitigation, of the ARCID code and call *sign* (*callsign*) to be used in the operations.	The justification shall be the document "Operational risk assessment and mitigation (EARO) for UAS operations in general UAS geographical zones for operational safety reasons in controlled airspace and flight information zone (FIZ)" or similar. Evidenced in the operational coordination procedure.
☒	MAE13	Strategic	Analysis of the time slots with the lowest air traffic density in the planned area of operations.	To be assessed by the aerodrome or heliport manager when coordinated with it (MAE09) in accordance with its procedures
☒	MAE15	Strategic	When flying above 120 m around an obstacle, a maximum horizontal distance from the pilot to the obstacle must be defined so as to maintain situational awareness.	

☒	MAE16	Strategic	Establish additional safety zones, horizontal and vertical.	May be required by the ATSP in pre-tactical coordination, depending on the specific place of operations, and on a justified basis.
☒	MAE17	Strategic	Conduct the UAS operation at the most appropriate time, as determined by the affected ATS unit.	Pre-tactical and tactical.
☒	MAE18	Strategic	At the discretion of the ATS provider, the operation shall be published in a NOTAM, ATIS, DATIS or other aeronautical dissemination medium where it is determined that UAS operations may pose a risk to manned aviation operations.	At the discretion of the ATSP
☒	MAE20	Strategic	Have procedures in place for checking activities and warnings for airspace users (NOTAM) in the planned area of operations. Operations must be carried out by personnel with the appropriate competence to comply with the mitigation requirements relating to the consultation and interpretation of NOTAM, ATIS and DATIS. As appropriate, the ENAIRE DRONES application, FLAGSHIP platforms and ICARO XXI can be used and, specifically, the "BOL" functionality of the latter's Bulletins, with all the information of interest regarding an aerodrome or area of operations.	The remote pilot training defined by EASA does not include familiarisation with the AIP and the interpretation of aeronautical charts, so this must be evidenced in the "Operational Risk Assessment and Mitigation (EARO)" or similar (check ENAIRE Drones/ ICARO XXI / check ATIS frequencies in the AIP).
☒	MAE21	Strategic	Regardless of the maximum height permitted in the operational category or in the authorised CONOPS, the ATSP may require a lower maximum operating height.	

☒	MAE22	Strategic	Have at least one green flashing light for the purposes of visibility of the unmanned aircraft at night.	UAS.SPEC.050.1.l Required for night flights.
☒	MAE23	Strategic	Have anti-collision or navigation lights, provided that they do not create confusion for other users.	Art. 43.6.a. RD UAS 517/2024. May be required by the ATSP. As determined in pre-tactical coordination.
☒	MAE24	Strategic	Have a transponder or other identification system (e.g. ADS-B "out") for air traffic services.	Art.43.6.a RD UAS 517/2024 May be required by the ATSP. As determined in pre-tactical coordination.
☒	MAT01	Tactical	Checking of activities and warnings for airspace users (NOTAM, ATIS/ DATIS, etc.) in the area where the UAS operations will take place. As appropriate, the ENAIRE DRONES application, FLAGSHIP platforms and ICARO XXI can be used and, specifically, the "BOL" functionality of the latter's Bulletins, with all the information of interest regarding an aerodrome or area of operations.	The remote pilot training defined by EASA does not include familiarisation with the AIP and the interpretation of aeronautical charts, so this must be evidenced in the "Operational Risk Assessment and Mitigation (EARO)" or similar (check ATIS frequencies in the AIP). Otherwise, the ATSP must indicate the specific ATIS frequency during tactical coordination.
☒	MAT02	Tactical	Maintain an active listening watch on the relevant aeronautical frequency or, failing that, be able to communicate via mobile telephone (adequate sound volume and with coverage).	Where aeronautical-band radio has been required by the ATS provider or the aerodrome or heliport manager.

☒	MAT03	Tactical	Contact the ATS unit with the advance notice indicated by the ATSP in accordance with the coordination procedure to verify the feasibility of the operation.	
☒	MAT04	Tactical	Have prior air traffic control (ATC) clearance or communication with aerodrome flight information (AFIS) personnel. On first contact with air traffic services units, the call signs of unmanned aircraft must include the words “No tripulado” or “Unmanned”.	Art. 42.3 RD UAS 517/2024
☒	MAT06	Tactical	Report the completion of the operation to the air traffic services (ATS) unit.	
☒	MAT07	Tactical	The availability and execution by the UAS operator of specific procedures for abnormal and emergency situations, the main measure of which shall be notifying the ATS unit by radio/telephone in the event of loss of control of the UAS (fly-away).	
☒	MAT08	Tactical	Prior analysis of VHF coverage in the planned area of operations, as well as of telephone network coverage where this means is used either as the primary communications system or as an alternative if the primary means fails. Before commencing the operation, the operator must be in a position to carry out a radio test and/or call, the advisability of which shall be at the discretion of the ATS unit.	Where aeronautical-band radio and/or alternative means of communication have been required by the ATS provider or the aerodrome or heliport manager.
☒	MAT10	Tactical	Request anti-collision advice or traffic information regarding manned aircraft in the vicinity.	

☒	MAT11	Tactical	Immediate landing upon communication from the ATC service or traffic information from the AFIS.	

5. OPERATIONS COORDINATION PROCEDURE WITH ATSP

This section establishes the communications and detailed coordination procedure to be followed to carry out each of the air operations intended by the UAS operator in controlled airspace.

The communication procedures defined between the operator and the air traffic services provider (ATSP) are detailed below, covering the assigned call signs and the various means of communication available:

ARCID CODE*	
CALLSIGN*	
LANGUAGE TO BE USED IN AERONAUTICAL COMMUNICATIONS	SPANISH
PRIMARY MEANS OF COMMUNICATION	MOBILE PHONE
ALTERNATIVE MEANS OF COMMUNICATION	MOBILE PHONE
REQUEST FOR NOTAM PUBLICATION	AT THE DISCRETION OF THE ATS UNIT*

*Without prejudice to any modification by the ATCO/AFISO during operations on the basis of their authority, or in tactical coordination.

The UAS operator must also follow the procedure and operations flowchart below, drawn up by ENAIRE, which sets out in an orderly and chronological manner the instructions to be followed for the execution of any flight in accordance with the coordinated ConOps:

1) Identify the need for coordination with ENAIRE on **ENAIRE Drones**.
2) At least **10 days**[3] before the operation, submit to ENAIRE:
   - A copy of the evidence of EARO coordination (this document) signed by both parties.
   - The specific details of the operation **as per the ENAIRE Planea Activity Form**.
3) On the day before the operation (recommended), or up to 60 minutes before the operation start time, submit a flight plan for air traffic services (FPL) following the ENAIRE guidance

[3] This minimum advance notice shall not apply to urgent operations that provide **a public service of general interest to society (e.g. search and rescue, infrastructure inspections in critical situations, firefighting, security, etc.)**. For these cases, ENAIRE has a specific procedure to which operators carrying out such operations may sign up.
Non-EASA oerators interested may request to sign up by contacting COOP at: coop.org.oficiales@enaire.es . Through the same channel, queries about specific coordination requirements applicable to this type of operation may also be raised.

guidance available on its website. (**Only** if the need to submit an FPL is indicated in pre-tactical coordination.)
https://www.enaire.es/vuela_tu_dron/donde_puedes_volar_tu_dron/zonas_geograficas_de_enaire)

3) Before the flight:
   - Verify that the ATS flight plan has been correctly submitted (only in cases where its submission is required). .
   - Check the Pre-Flight Information Bulletin (PIB) and/or NOTAM and weather conditions in the area of operations.
4) Before commencing operations: contact ATC/AFIS with the advance notice defined in pre-tactical coordination to confirm the operation, where so defined.
   - On the first communication, the remote pilot shall report the reference number of the operation in question (REF. ENAIRE XXX / Call sign XXX), and shall include the words "NO TRIPULADO" or "UNMANNED" in the communication.
5) After completing operations, where applicable:
   - Contact the ATCO/AFISO and report completion of operations
   - Notify the closure of the ATS flight plan by calling the relevant ARO office.

6. SPECIFIC PROCEDURES FOR ABNORMAL AND EMERGENCY SITUATIONS

The UAS operator shall apply the following procedures in abnormal and emergency situations:

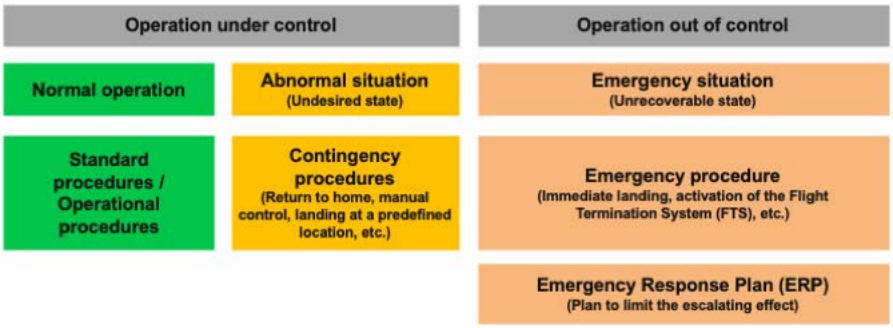

EVENT	PROCEDURE
Loss of communications with the ATSP (radio failure	• If the communications failure is detected by the ATS unit: - Establish communication via alternative means (landline or mobile phone) and report the radio communications failure. Assess whether to continue or cancel UAS operations. • If the communications failure is detected by the UAS operator: - Maintain situational awareness, with heightened observation of the airspace and "see and avoid". - Establish communication via alternative means (landline or mobile phone), report the radio communications failure, and proceed in accordance with ATS instructions. - If the operator is unable to establish communication by any means, the flight must end immediately, landing the aircraft in a safe location.

	- Report the completion of the activity to the ATS unit as soon as possible by the relevant alternative means, and cancel the ATS flight plan. - Should communications be re-established, the UAS operator must again obtain ATC clearance or AFIS communication before starting a new flight.
Loss of UAS control (fly away)	• If control cannot be regained and/or the UAS position is unknown: - Consider activating the safe flight termination system in accordance with the operator's procedures. - Notify ATS as soon as possible by radio/telephone of the loss of UA control and position: - Call sign + "no tripulado" or "unmanned" - Emergency due to loss of control of the unmanned aircraft - Last known position, speed, heading and height/altitude - Remaining endurance - Inform ATS that the emergency has ended once it is known that the UA is no longer in flight, or once it is certain that it cannot remain in flight any longer (i.e. the UA's maximum total endurance time has elapsed)

The contact details for notifications in the event of abnormal or emergency situations are as follows:

Position	Contact
ATS unit (civil/military)	Frequency / TEL // According to the unit concerned. Provided in advance coordination
ENAIRE Airspace Operational Coordination Department (COOP)	ENAIRE PLANEA / cop@enaire.es
Airport Management Centre (CGA) / Airport Operations / Military base	According to the unit concerned. Contact details provided in advance coordination
Emergencies	112

7. EVIDENCE OF COORDINATION AND VALIDITY

This coordination is valid indefinitely, subject in all cases to the proper implementation of the mitigation measures and to compliance with the limitations or conditions of the operation established, and for as long as such compliance is maintained. Any modification of, or deviation from, the provisions set out in this document shall require a new agreement.

Approval of this EARO shall entail the automatic cancellation of any other EARO previously issued, thereby ending the validity of the latter. This automatic cancellation shall apply whenever a new EARO is submitted, corresponding to the same UAS operator and the same type of ConOps, provided that the new EARO covers the maximum limitations established and maintains the same ATS unit, in the case of specific EAROs. Likewise, where a generic EARO is requested or issued, all previous specific EAROs associated with that operator and ConOps shall automatically be cancelled.

Where there are justified grounds, the ENAIRE reserves the right to amend these conditions or revoke the agreement.
In witness of agreement and as evidence of coordination, both parties indicate their consent to this document:

The UAS operator	**The Air Traffic Services Provider**
☐ On their own behalf	
☐ By means of representation/power of attorney	Signature
Signature	
Position	Head of the Systems and Drones Safety Analysis Department at ENAIRE

ANNEX I. GENERAL UAS GEOGRAPHICAL ZONES FOR OPERATIONAL SAFETY REASONS IN THE VICINITY OF AERODROMES OR HELIPORTS, CIVIL OR MILITARY

This risk assessment and operations coordination shall be valid provided that the **flight geography and its associated contingency volume**, as set out in the semantic model described, lie **within and/or outside the general UAS geographical zones for operational safety reasons in the vicinity of aerodromes or heliports, civil or military**, defined as follows:

a) At public-use civil aerodromes and military aerodromes of any kind that are not heliports:

1) **Up to 45 metres in height** measured from the Aerodrome Reference Point (ARP): an area 6 km long, measured from the runway ends in the direction of the extended runway centreline outwards, and 5 km wide on each side measured from the runway centreline. In any case, the lower limit of this volume shall be ground level.

2) **Above 45 metres and up to 900 metres in height**, both measured from the Aerodrome Reference Point (ARP): an area 10 km long, measured from the runway ends in the direction of the extended runway centreline outwards, and 7.5 km wide on each side measured from the runway centreline.

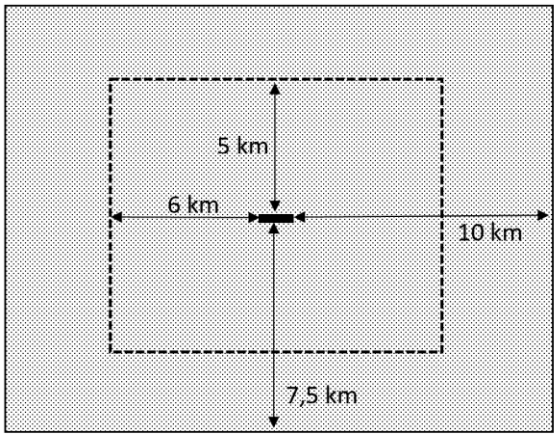

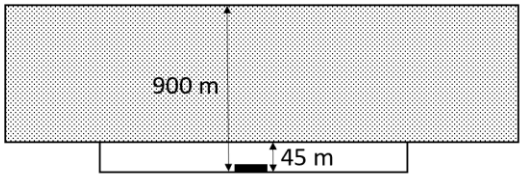

b) At public-use and military heliports:

1) **Up to 90 metres in height** measured from the Heliport Reference Point (hereinafter HRP): an area 2.5 km long, measured from the ends of the final approach and take-off area (hereinafter FATO) in the direction of the extended FATO centreline outwards, and 2.5 km wide on each side measured from the FATO centreline. In any case, the lower limit of this volume shall be ground level.

2) **Above 90 metres in height and up to 900 metres in height**, both measured from the HRP: an area 3.3 km long, measured from the FATO in the direction of the extended FATO centreline outwards, and 3.3 km wide on each side measured from the FATO centreline.

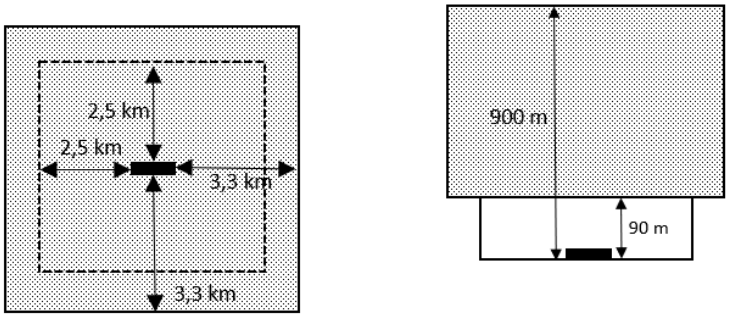

c) At restricted-use aerodromes other than heliports:

1) **Up to 45 metres in height** measured from the ARP: an area 3 km long, measured from the runway ends in the direction of the extended runway centreline outwards, and 3 km wide on each side measured from the runway centreline. In any case, the lower limit of this volume shall be ground level.

2) **Above 45 metres and up to 900 metres in height**, both measured from the ARP: an area 5 km long, measured from the runway ends in the direction of the extended runway centreline outwards, and 4.5 km wide on each side measured from the runway centreline.

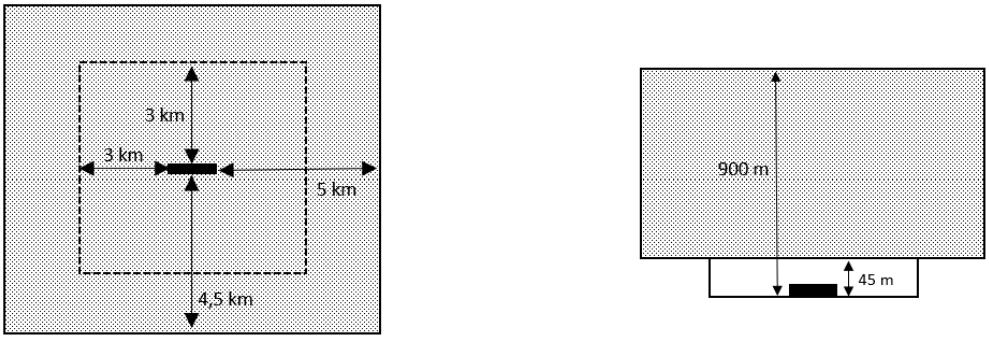

d) At restricted-use heliports:

1) **Up to 90 metres in height** measured from the HRP: a circular area of 2.5 km radius from the centre of the FATO. At restricted heliports with a runway-type FATO of more than 100 metres in length, the above distance shall be measured from each end of the FATO. In any case, the lower limit of this volume shall be ground level.

2) **Above 90 metres in height and up to 450 metres in height**, both measured from the HRP: a circular area of 3.3 km radius from the centre of the FATO. At restricted heliports with a runway-type FATO of more than 100 metres in length, the above distance shall be measured from each end of the FATO.

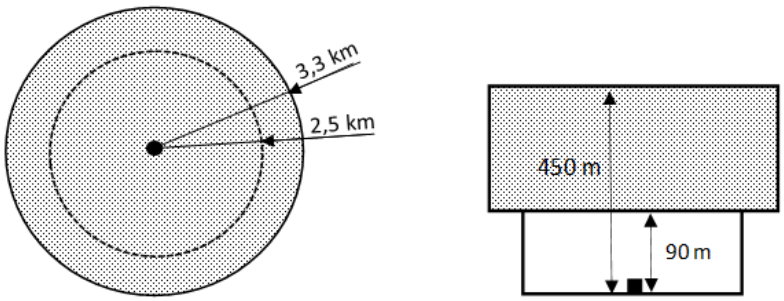

ANNEX II. EVIDENCE OF COMPLIANCE WITH MITIGATION MEASURES

This annex provides evidence of the implementation of the following mitigation measures:

- **MAE10.** Have procedures in place for consulting and analysing in the AIP the various departure and arrival procedures for the airport in question, taking into account its possible operational configurations (runway in use), including missed approaches and engine-out take-offs. Operations must be carried out by personnel with the appropriate competence to comply with the mitigation requirements relating to the consultation and interpretation of FLIGHT PROCEDURES.

Departure procedures for an aerodrome:

Arrival procedures for an aerodrome:

- **MAE20 and MAT01.** Have procedures in place for checking activities and warnings for airspace users (NOTAM) in the planned area of operations.
  Operations must be carried out by personnel with the appropriate competence to comply with the mitigation requirements relating to the consultation and interpretation of NOTAM, ATIS and DATIS.
  As applicable, the ENAIRE DRONES app, the INSIGNIA platforms, the AIP, ICARO XXI and, in particular, the latter's "BOL" Bulletins functionality, may be used to obtain all the relevant information about an aerodrome or area of operations.
  To evidence the measures above, screenshots are required of: ENAIRE DRONES /ICARO XXI and ATIS frequencies published in the AIP (Aerodrome data, item 18).

Screenshot of NOTAM check:

Screenshot of ATIS check:

ANNEX III. REQUIREMENTS FOR UNMANNED AIRCRAFT SYSTEMS INTENDED TO BE USED UNDER STS-ES-02NE

UAS used under this STS-ES-02NE must comply with the following:

1. have an MTOM or, where this has not been provided by the manufacturer in the user's manual or the UAS is privately built, the UAS operator shall ensure that the take-off mass of the unmanned aircraft, in its take-off configuration, is less than 25 kg, including payload;
2. have a maximum characteristic dimension of less than 3 m;
3. be safely controllable, with regard to stability, manoeuvrability and command and control link performance, by a remote pilot with adequate competence as defined in this STS-ES-02 and following the manufacturer's instructions or a similar document developed by the UAS operator in accordance with point 22, where necessary under all anticipated operating conditions, including following the failure of one or more systems.
4. have the mechanical strength required for the unmanned aircraft, including any necessary safety factor and, where appropriate, the stability to withstand any stress to which it is subjected during use, without any breakage or deformation that could interfere with safe flight.
5. be designed so that, in the event of a failure, it does not fly outside the operational volume or cause a fatal accident; in addition, human-machine interfaces shall minimise the risk of pilot error and shall not cause excessive fatigue.
6. be designed and manufactured in such a way as to minimise injury to people during operation; sharp edges on the unmanned aircraft shall be avoided, unless technically unavoidable under good design and manufacturing practice. If the UAS is equipped with propellers, the unmanned aircraft shall be designed in such a way as to limit any injury that may be caused by the propeller blades.
7. provide means to prevent the unmanned aircraft from exceeding the horizontal and vertical limits of a programmable operational volume.
8. during flight, provide the remote pilot with clear and concise information on the geographical position of the unmanned aircraft, its speed and its height above the surface or take-off point.
9. in the event of loss of the command and control link, have a reliable and predictable method for the unmanned aircraft to recover the command and control link or, failing that, terminate the flight in a way that reduces the effect on third parties in the air or on the ground.
10. have a maximum ground speed in horizontal flight of 50 m/s.
11. unless it has a maximum ground speed in horizontal flight of less than 33 m/s, be equipped with a low-speed mode selectable by the remote pilot that limits the ground speed to 33 m/s.
12. have a unique serial number.
13. provide means to program the trajectory of the unmanned aircraft.
14. provide means for the remote pilot to terminate the flight of the unmanned aircraft, which shall:
    a) be reliable and predictable, independent of the automatic flight control and guidance system and independent of the means to prevent the unmanned aircraft from exceeding the horizontal and vertical limits (including as regards their activation); and
    b) force the descent of the unmanned aircraft and prevent its motorised horizontal displacement.
15. in accordance with UAS.STS-ES-01NE.030 12) b), have direct remote identification that:
    a) allows the upload of the UAS operator registration number required in accordance with Article 14 of Commission Implementing Regulation (EU) 2019/947 and of any additional number provided by the registration system; the system shall perform a consistency check verifying the integrity of the full string provided to the UAS operator at the time of registration; in the event of inconsistency, the UAS shall emit an error message to the operator;

b) ensures, in real time throughout the duration of the flight, the direct periodic broadcast from the unmanned aircraft, using an open and documented transmission protocol, in such a way that the data can be received directly by existing mobile devices within the broadcasting range, of at least the following data:

i. the UAS operator registration number and the verification code provided by the Member State during the registration process, unless the consistency check referred to in point (a) is not passed;
ii. where applicable, the unique serial number of the unmanned aircraft compliant with standard *ANSI/CTA-2063-A-2019, Small Unmanned Aerial Systems Serial Numbers, 2019*;
iii. the time stamp, the geographical position of the unmanned aircraft and its height above the surface or take-off point;
iv. the route course measured clockwise from true north and the ground speed of the unmanned aircraft;
v. the geographical position of the remote pilot or, if not available, the take-off point; and
vi. an indication of the emergency status of the UAS;

c) reduces the ability to tamper with the functioning of the direct remote identification system. .

16. if equipped with a geo-awareness function, this shall provide:
a) an interface to load and update data containing information on airspace limitations related to the position and height of the unmanned aircraft imposed by the UAS geographical zones, as defined in Article 15 of Commission Implementing Regulation (EU) 2019/947, ensuring that the process of loading or updating these data does not degrade their integrity or validity;
b) a warning alert to the remote pilot when a potential breach of airspace limitations is detected; and
c) information to the remote pilot on the status of the unmanned aircraft, as well as a warning alert when its positioning or navigation systems cannot ensure the proper functioning of the geo-awareness function.
17. if the unmanned aircraft has a function that limits its access to certain airspace areas or volumes, this function shall operate in such a manner that it interacts smoothly with the flight control system of the unmanned aircraft without adversely affecting flight safety. In addition, clear information shall be provided to the remote pilot when this function prevents the unmanned aircraft from entering these airspace areas or volumes.
18. be equipped with a data link protected against unauthorised access to the command and control functions.
19. transmit a clear warning alert to the remote pilot when the battery of the unmanned aircraft or its control unit reaches a low level, so that the remote pilot has sufficient time to land the unmanned aircraft safely.
20. be equipped:
a) with lights for the purposes of controllability of the unmanned aircraft; and
b) with at least one green flashing light for visibility of the unmanned aircraft at night, to allow a person on the ground to distinguish the unmanned aircraft from a manned aircraft
21. have manufacturer's instructions or a similar document developed by the UAS operator, where applicable, in accordance with the documentation provided by the manufacturer, setting out the following:
a) the characteristics of the unmanned aircraft, including, but not limited to, the following:
    i. the mass of the unmanned aircraft (with a description of the reference configuration) and the maximum take-off mass (MTOM);
    ii. the general characteristics of permitted payloads in terms of mass, dimensions, interfaces with the unmanned aircraft and other possible restrictions;
    iii. the equipment and *software* to control the unmanned aircraft remotely;

iv. a description of the means to terminate the flight;
v. a description of the means to prevent the unmanned aircraft from exceeding the horizontal and vertical limits of the operational volume, and of the size of the contingency volume needed to take into account the position estimation error, the reaction time and the reaction manoeuvre margin;
vi. the distance the unmanned aircraft is likely to travel once the means to terminate the flight have been activated, which the UAS operator must take into account when defining the ground risk buffer;
vii. if it has direct remote identification, the procedures for uploading the UAS operator registration number into the remote identification system;
viii. if it has direct remote identification, the reference of the transmission protocol used for direct remote identification emissions;
ix. a description of the behaviour of the unmanned aircraft in the event of loss of the command and control link, and the method for recovering the command and control link of the unmanned aircraft; ;

b) clear operating instructions;
c) if equipped with a geo-awareness function, the procedure for uploading airspace limitations into it;
d) maintenance instructions;
e) troubleshooting procedures;
f) operating limitations (including, but not limited to, meteorological conditions and day/night operations); and
g) an appropriate description of the risks related to the operation of the UAS.

22. if equipped with a network remote identification system, this shall:
a) ensure, in real time throughout the flight, the transmission from the unmanned aircraft, using an open and documented transmission protocol, in such a way that the data can be received through a network, of at least the following data:
i. the UAS operator registration number and the verification code provided by the Member State of registration during the registration process, unless the consistency check referred to in point 16 (a) is not passed;
ii. where applicable, the unique serial number of the unmanned aircraft compliant with standard *ANSI/CTA-2063-A-2019, Small Unmanned Aerial Systems Serial Numbers, 2019*;
iii. the time stamp, the geographical position of the unmanned aircraft and its height above the surface or take-off point;
iv. the route course measured clockwise from true north and the ground speed of the unmanned aircraft;
v. the geographical position of the remote pilot or, if not available, the take-off point; and
vi. an indication of the emergency status of the UAS;
b) reduce the ability to tamper with the functioning of the direct remote identification system.

ANNEX IV. ACRONYMS

AESA	State Aviation Safety Agency.
ADS-B	Automatic Dependent Surveillance–Broadcast.
AFIS	Aerodrome Flight Information Services.
AFISO	Aerodrome Flight Information Services Officer.
AGL	Above Ground Level.
AIP	Aeronautical Information Publication.
ANSP	Air Navigation Services Provider.
AO	Airspace Observer.
ARC	Air Risk Class.
ARCID	Aircraft identifier/ call sign associated with the flight plan.
ARO	Air Traffic Services Reporting Office.
ARP	Aerodrome Reference Point.
ATC	Air Traffic Control.
ATCO	Air Traffic Control Officer.
ATIS	Automatic Terminal Information Service.
ATO	Approved Training Organisation.
ATS	Air Traffic Services.
ATSP	Air Traffic Services Provider.
ATZ	Air Traffic Zone.
BOL	Bulletin /bulletins functionality in ICARO XXI.
BVLOS	Beyond Visual Line of Sight.
CGA	Airport Management Centre.
ConOps	Concept of Operations.
COOP	ENAIRE Airspace Operational Coordination Department.
CTR	Controlled Traffic Region.
DATIS	Digital Automatic Terminal Information Service.
EARO	Operational Risk Assessment and Mitigation.
EASA	European Union Aviation Safety Agency.
FATO	Final Approach and Take-Off Area.
FIZ	Flight Information Zone.
FPV	First Person View.
FPL	Flight Plan.
HRP	Heliport Reference Point .
ICARO XXI	Aeronautical information management system/platform used by ENAIRE.
MAE	Strategic Mitigation Measure.
MAT	Tactical Mitigation Measure.
MTOM	Maximum Take-Off Mass.
NOTAM	Notice to Airmen (notice containing information regarding the establishment, condition or modification of any aeronautical facility, service, procedure or hazard, the timely awareness of which is essential for personnel involved in flight operations).
PDRA	Pre-Defined Risk Assessment.
PIB	Pre-Flight Information Bulletin.
SAIL	Specific Assurance and Integrity Level.
SORA	Specific Operations Risk Assessment.
STS	Standard Scenario.

TLF	Telephone.
UA	Unmanned Aircraft.
UAS	Unmanned Aircraft System.
VHF	Very High Frequency.
VLOS	Visual Line of Sight.
VTOL	Vertical Take-Off and Landing.